MOBILE C-ARM WITH FLAT PANEL DETECTOR

GEDEON

Arco en C móvil / Mobile C-arm

ISAIND
ADVANCED IMAGING



Clear imaging where surgical decisions are made.

GEDEON combines a high-frequency X-ray generator, an amorphous-silicon flat panel detector with CsI scintillator and a compact C-arm with motorized vertical travel. Built for the operating room: it positions quickly, delivers clear images and is designed for low skin-absorbed dose.

5 kW	220 kHz	1024 × 1024	400 mm
High-frequency generator	Inverter frequency	a-Si / CsI detector	Motorized vertical travel

DESIGNED FOR: Orthopedics · Spine · Trauma · Operating rooms

isaind.com info@isaind.com WhatsApp +593 98 998 5755

KEY BENEFITS

Everything a surgical team needs from a C-arm

Clear images
The 1024 × 1024 flat panel detector with 200 µm pixel pitch and 16-bit A/D conversion delivers sharp images over a 204.8 × 204.8 mm active area.

Low skin dose
High-frequency technology converts mains power into a constant high-voltage output: clear images with relatively low skin-absorbed dose. Pulsed fluoroscopy with an adjustable rate from 1 to 30 lets you tailor exposure to each procedure.

High-frequency high voltage
220 kHz ±5% inverter, 40–125 kV in 1 kV steps and ±4% kV accuracy over the full range for stable, repeatable output.

Compact & easy positioning
Mobile, maneuverable chassis with 900 mm open space, 540 mm arc depth, ±180° horizontal rotation and 180° orbital sliding.

Motorized vertical movement
400 mm of motorized vertical travel, plus 200 mm horizontal movement and ±22.5° swing to center the anatomy effortlessly.

Pulsed + continuous fluoroscopy
Continuous fluoro 0.5–6 mA and pulsed fluoro 10–50 mA, plus radiography at 10–100 mA, 2–4000 ms and up to 2000 APR programs.





Color-coded controls and locking brakes

Dimensions (mm)

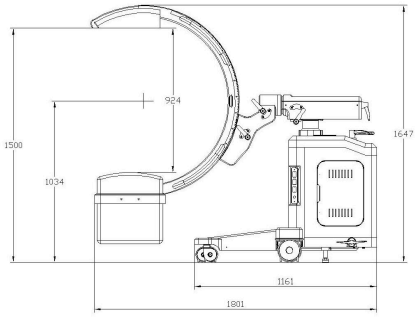

Clinical applications

Orthopedics
Fracture reduction and fixation, implant placement and intra-operative control.

Spine surgery
Guidance for spine procedures with precise orbital and vertical positioning.

Trauma
Fast response in emergency and surgery thanks to its mobility.

Operating rooms
Easy integration into general and specialized surgical suites.

TECHNICAL SPECIFICATIONS

ISAIND GEDEON datasheet

C-ARM · MECHANICS	
Vertical movement	400 mm (motorized)
Horizontal movement	200 mm
Horizontal rotation	±180°
Arc-track sliding rotation	180°
Horizontal swing	±22.5°
Open space	900 mm
Arc depth	540 mm

HIGH-FREQUENCY X-RAY GENERATOR (MONOBLOCK)	
Output power	Exposure 5 kW · Continuous fluoro 500 W · Pulsed fluoro 5 kW
Rated voltage	220 VAC ±10%, 50 Hz
Inverter frequency	220 kHz ±5%
kV accuracy	±4% over full range
mA accuracy	≤ ±5% (mA > 25 mA, ms > 5); ≤ ±(10% + 1 mA) (mA ≤ 25 mA)
Anode	Fixed
Inherent filtration	2.1 mmAl (tube 0.6 mmAl; cover 1.5 mmAl)

EXPOSURE & FLUOROSCOPY PARAMETERS	
kV range (exposure)	40–125 kV, 1 kV step
mA range	10–100 mA (R'10 or R'20)
ms range	2–4000 ms (R'10 or R'20)
ms accuracy	≤ ±(5% + 0.2 ms)
mAs range	0.1–200 mAs (R'10 or R'20)
mAs accuracy	≤ ±(5% + 0.2 mAs)
Fluoro kV range	40–125 kV, 1 kV step
Fluoro mA range	Continuous: 0.5–6 mA, 0.1 mA step · Pulsed: 10–50 mA, 0.5 mA step
Pulsed fluoro frame rate	1–30, step 1
Exposure techniques	kV-mAs · kV-mA-ms
APR (anatomical programs)	Up to 2000 APR entries
Communication interface	RS-232 (PC communication)
Generator dimensions	Inverter box 340 × 240 × 80 mm · Monoblock head 310 × 130 × 210 mm (excl. terminal blocks)
Generator weight	Inverter box 5.5 kg · Monoblock head 11.5 kg

X-RAY TUBE	
Maximum power	5 kW
Focal spot	Small 0.6 · Large 1.2
Exposure duty cycle	1:60
Max. tube current, small filament	60 mA
Max. tube current, large filament	125 mA
Leakage radiation loading factors	125 kV, 0.24 mA
Target material	Tungsten
Anode heat capacity	53 kJ (74 kHU)

FLAT PANEL DETECTOR	
Type	Amorphous silicon (a-Si)
Scintillator	Cesium iodide (CsI)
Effective image size	204.8 × 204.8 mm
Effective pixel matrix	1024 × 1024
Pixel pitch	200 µm
A/D conversion	16 bits
Spatial resolution	2.5 lp/mm
MTF @ 0.5 / 1.0 / 1.5 / 2.0 lp/mm *	0.79/0.83 · 0.56/0.60 · 0.36/0.40 · 0.20/0.24
DQE @ 0 / 0.5 / 1.0 / 1.5 / 2.0 lp/mm (2.5 µGy, RQA5) *	0.70/0.75 · 0.53/0.57 · 0.44/0.48 · 0.31/0.35 · 0.16/0.20
X-ray working range	40–150 kV
Data interface	Gigabit Ethernet
Max. frame rate	30 fps (1×1) · 60 fps (2×2)
Power consumption	9 W
AC supply / power adapter	100–240 VAC · output DC 24 V, 60 W
Detector size	260 × 252 × 66 mm
Detector weight	1.9 ± 0.1 kg
Cover material	Carbon plate, aluminum alloy
Operating environment	5–35 °C, 10–75% RH
Storage conditions	−20–55 °C, 10–75% RH

POWER SUPPLY	
Power supply	AC 220 V
Rated power	5 kW

* MTF/DQE value pairs as listed in the detector datasheet (two values per spatial frequency). Specifications subject to change without notice; please confirm the configuration with ISAIND before purchase.

WHY ISAIND

Backed by people who know imaging equipment from the inside

ISAIND specializes in medical imaging: we refurbish, remanufacture, recondition and maintain X-ray equipment and C-arms. When you choose GEDEON you get more than a device: you gain a technical partner for its entire service life.

Local technical support
Engineers who know the system in depth, with direct support via WhatsApp and email.

Installation & commissioning
On-site installation, functional verification and initial setup.

Training
Training for clinical staff and biomedical engineers: safe operation and daily care of the system.

Preventive & corrective maintenance
Maintenance plans that keep the system available and reduce unplanned downtime.

Calibration
Calibration and verification of generator and imaging-chain parameters.

Remanufacturing expertise
Hands-on knowledge of generators, tubes and detectors from our refurbishment and remanufacturing work.

ISAIND Fluoro · companion software
Our ISAIND Fluoro fluoroscopy software can complement GEDEON for image viewing and management. Ask us about the configuration available for your institution.

FOR HOSPITALS, CLINICS, BIOMEDICAL ENGINEERS AND DISTRIBUTORS WORLDWIDE.

Request a quote or a demo

Tell us about your clinical application and we will help you define the right configuration. Clear technical answers, no obligation.

Message us on WhatsApp · +593 98 998 5755

ISAIND ADVANCED IMAGING

WHATSAPP
+593 98 998 5755

EMAIL
info@isaind.com

WEB
isaind.com

ADDRESS
Jardines del Salado Mz 207 V15, Guayaquil, Ecuador