Portable X-ray machine

ISAIND PX-5



Suitable for hospitals | medical clinics | nursing homes

Introduction

Compact and convenient X-ray

The ISAIND PX-5 is a multifunctional portable X-ray machine that includes a 5 kW X-ray power supply. Its small size, light weight and high power density make it suitable for a wide range of portable X-ray applications.



Product features

ISAIND
ADVANCED IMAGING



1 Compact, portable and easy to use



2 Wireless-controlled exposure

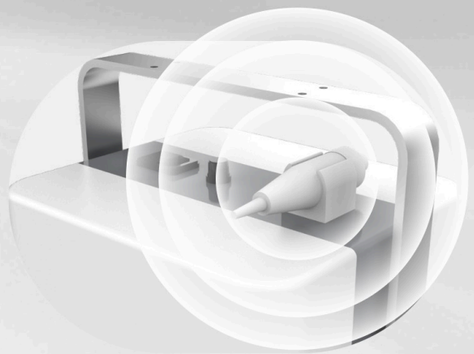

3 Wired manual exposure



4 Flexible operation, fast imaging



5 Bluetooth support
Easy connection to a computer



Application







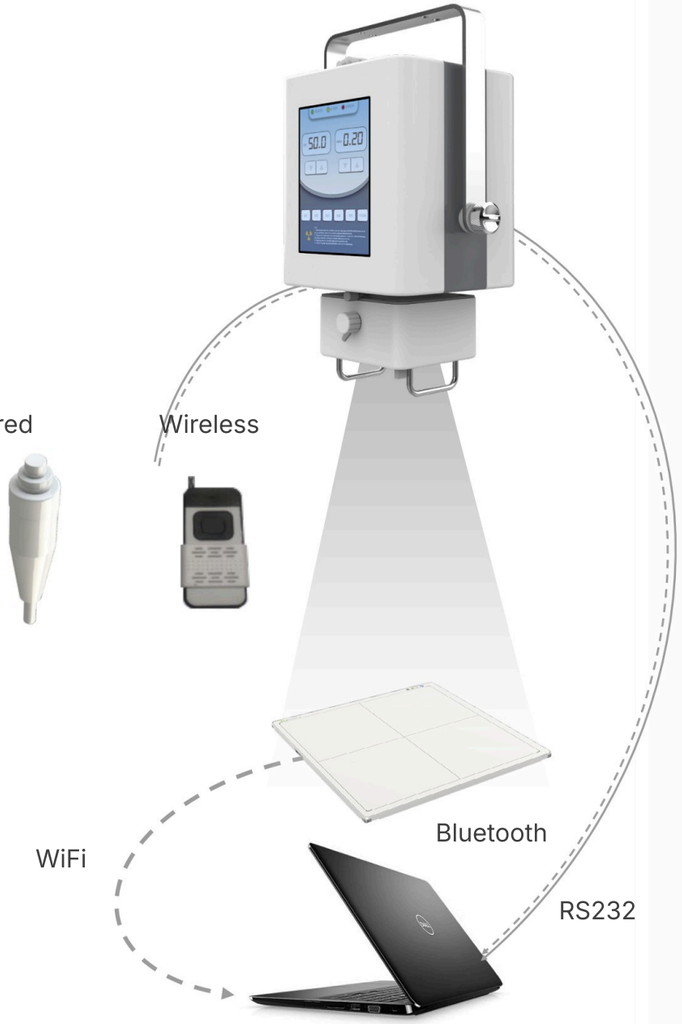

Clinical images







Specifications

Model	ISAIND PX-5
System requirements	
Power supply	AC 210~230V / AC 100V~120V
Power	5 kW
Generator	
kV range	40~125 kV
mAs range	0.1~100 mAs
mA range	10~100 mA
Communication mode	RS232 / Bluetooth
Exposure mode	Wired / Wireless
X-ray tube	
Focal spots	0.6 / 1.8 mm
Anode angle	15°
Mechanical parameters	
Size	505 × 348 × 230 mm
Weight	16 kg

Dimensions

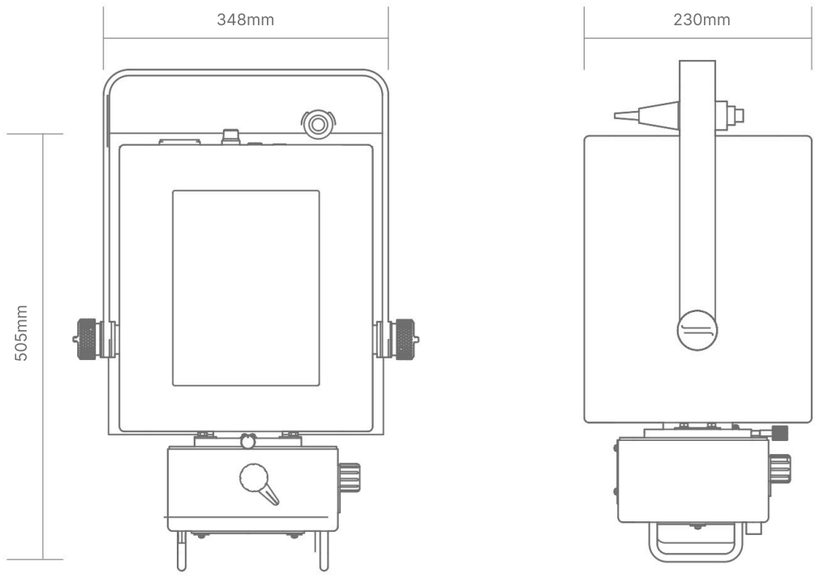

ISAIND · Jardines del Salado Mz 207 V15, Guayaquil, Ecuador
WhatsApp +593 98 998 5755 · info@isaind.com · isaind.com